SSPC, the SFI Research Centre for Pharmaceuticals

CONTINUOUS FEEDING OF A MESOPOROUS SILICA USING A LOSS-IN-WEIGHT FEEDER

Brian Kerins[1], Abina Crean[1]
[1] SSPC, School of Pharmacy, University College Cork, Cork, Ireland

1 Introduction

Mesoporous silica for drug delivery

Currently one of the greatest challenges of developing solid oral dosage forms is overcoming the bioavailability issues of poorly water-soluble drugs. One approach to address this issue is the formulation of amorphous solid dispersions by loading an amorphous drug onto a mesoporous silica carrier. Recrystallization of the amorphous drug is prevented via two interactions; the adsorption onto the high energy surface of the silica, and the confined space within the pores[1].

Scaling to industrial manufacturing

While there is literature supporting the beneficial dissolution properties of drug-silica formulations, currently there is no commercial product of this nature available on the market. This is primarily due to challenges associated with scaling up the current drug loading batch processes. If a continuous loading process was to be designed, the initial step which must be considered is the continuous feeding of the silica raw material. Any inconsistencies of the powder feed stream here could pass compositional variability onto subsequent downstream processes and would ultimately negatively impact the final drug product quality[2].

Study objectives

Operate a continuous screw feeder to investigate:

1. The effect of the feeder tooling configuration on feed rate variability
2. The impact of the feeding process on the physcial properties of the silica

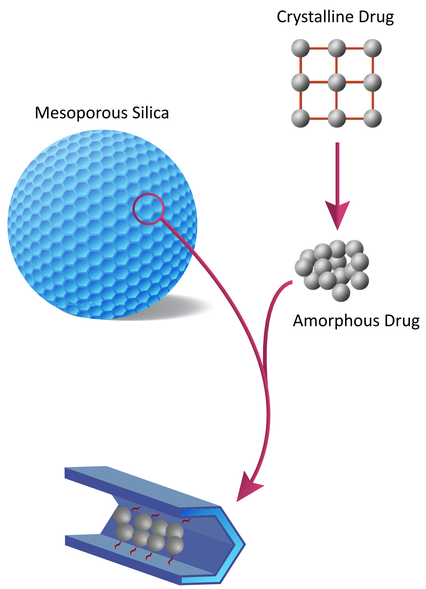

The amorphous form loaded into the silica pores and stabilised

2 Methodology

Material: Syloid 244 FP (a disordered mesoporous silica)

Equipment: K-Tron MT12 twin screw loss-in-weight feeder

Feeder tooling options:

- 2 screws (a coarse concave screw and a fine concave screw)
- 3 discharge screens (a coarse square, a fine square and no screen)

Feed rate variability

1. Calculated the feed factor for each specific tooling configuration.
   Feed factor (FF) = The feed rate when the screws are rotating at 100% speed in volumetric mode
2. Operated the feeder in gravimetric mode with gravimetric setpoints as 20, 55 and 90% of the FF for that specific tooling. Calculated the feed rate and relative variability using an independent scale at the outfeed.

Impact of feeding on silica physical proprties

Bulk density and flow function data measured using a Brookfield Powder Flow Tester. Characterisation performed on all 20 and 90% FF fed samples.

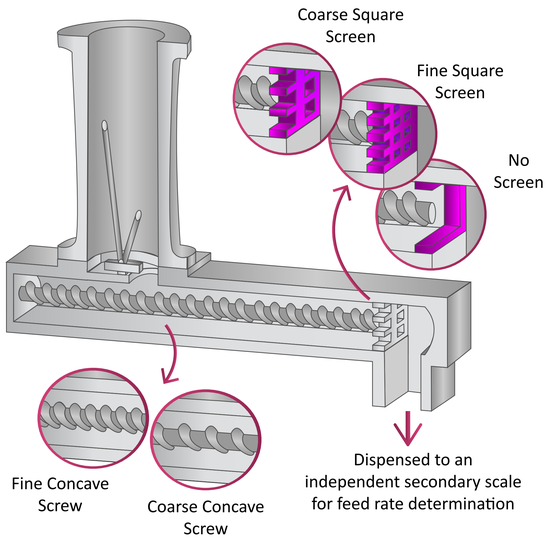

3 Results

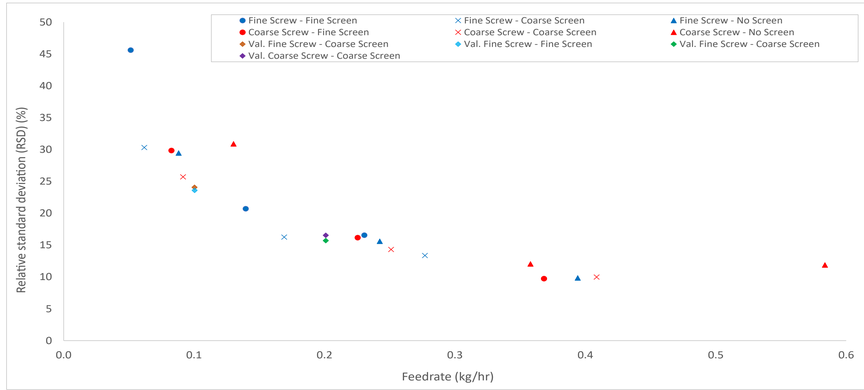

Figure 1: Feed rate variability (% RSD) for each tooling configuration at the 3 feed rate setpoints (20, 55, 90% FF)

Feed rate variability

- Screw and screen tooling options had minimal impact on the feed rate variability.
- 4 additional runs were performed (Val. runs) which further support this finding.

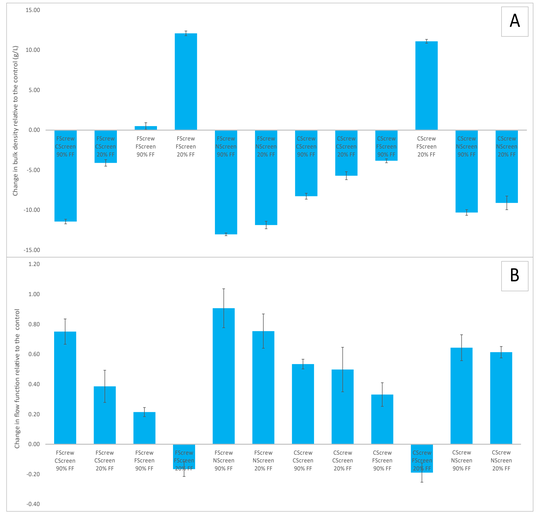

Figure 2: Change in the fed samples vs the control for (A) bulk density and (B) flow function. Error bars represent the standard deviation (n=3)

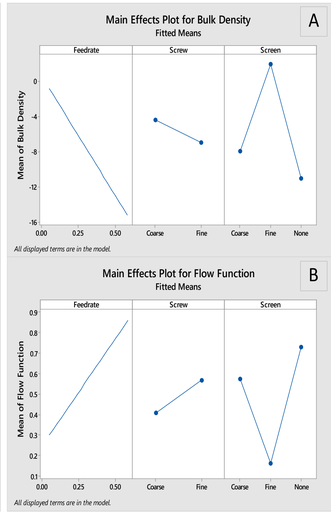

Figure 3: Summary of the main effects using a regression model for (A) bulk density and (B) flow function

Impact of feeding

- **Feed rate:** Higher feed rates improved the flow of fed silica
- **Screw:** Minor impact
- **Screen:** Fine screen had a converse to using the coarse/no screen. It produces smaller powder aggregates which contribute to the increase in bulk density and lower flow

4 Conclusions

This study established a methodology to characterise the feeding behaviour of a material using a loss-in-weight feeder. In relation to the mesoporous silica investigated, feeder tooling configuration was shown to have minimal impact on feed rate variability. However, tooling selection is still an important factor which must be considered as it was shown to impact the bulk density and flowability of the fed material.

References

[1] Mccarthy CA, Ahern RJ, Dontireddy R, Ryan KB, Crean AM. Mesoporous silica formulation strategies for drug dissolution enhancement: A review. Expert Opin Drug Deliv. 2016 Jan 2;13(1):93–108.

[2] Wang Y, Li T, Muzzio FJ, Glasser BJ. Predicting feeder performance based on material flow properties. Powder Technol. 2017 Feb 15;308:135–48.

FUNDED BY:
Ireland's European Structural and Investment Funds Programmes 2014-2020
Co-funded by the Irish Government and the European Union
European Union
European Regional Development Fund
Science Foundation Ireland For what's next